FLOATING SOLUTIONS

E-CRANE®
EQUILIBRIUM

E-CRANE'S
FLOATING BULK HANDLING TERMINALS

20 years ago, E-Crane® delivered the first barge mounted E-Cranes for offloading barges and small ships. E-Crane® has adapted this concept for offloading ships up to Panamax-class and has more than 30 units successfully operating world-wide. These E-Cranes have been developed in close cooperation with our clients. The concept of a floating bulk handling terminal is well suited for both port operations (ship-to-shore) as well as midstream transfer (barge-to-ship and ship-to-barge).

THE E-CRANE® ORGANIZATION IS ALWAYS OPEN MINDED WHEN IT COMES TO SOLVING OUR CLIENT'S NEEDS AND REQUIREMENTS. THIS FAMOUS "CAN-DO" ATTITUDE HAS RESULTED IN "CUTTING EDGE"-SOLUTIONS THAT HAVE SUCCESSFULLY SERVED OUR CUSTOMERS WORLD-WIDE.

-

Lieven Bauwens, CEO E-Crane®

The development of the E-Crane® Floating Bulk Terminal is another logical step in the evolution of this unique material handling concept. Floating transloading terminals address several material handling needs that are present in today's rapidly changing environment. This concept offers the following benefits:

- The complete terminal can be built and tested and then floated to its final destination
- The terminal can be located at the closest possible location to the mine, at the preferred transfer point or near the end user, all with limited local regulatory requirements.
- The complete terminal can be relocated quickly and cost effectively if required.
- The minimum investment combined with a short delivery time provides for an excellent return of investment.
- The option to have a floating buffer storage to smooth out any peaks and valleys between inbound and outbound material deliveries.

"THE E-CRANE® HAS CUT OUR UNLOADING TIME IN HALF, CUT OUR MAINTENANCE TIME DRAMATICALLY AND JUST GENERALLY SIMPLIFIED OUR LIVES AND REDUCED OUR COSTS SUBSTANTIALLY"

-

Tom Noble, Lowman Power Plant

The floating terminal offloads between 20 and 25 barges (1800 ton/barge) per day. Year after year, close to 6 million tons of Bauxite is transferred in an 8 month time window...

The Global Materials Services de Venezuela (GMSV) terminal is located near a bauxite unloading facility along the Orinoco River in Venezuela. This floating terminal was developed to improve the bauxite unloading at the existing port in this important region of Venezuela. The previous system of bauxite unloading had several limitations: poor serviceability and availability of the existing unloading equipment as well as interference of barge unloading with ship loading since the existing dock was used by ships as well as barges. The upgraded floating barge unloading terminal is now built around two equilibrium cranes mounted on an ocean going barge.

The two E-Cranes unload all the bauxite or the nearby alumina producer (CVG Bauxilum). This material originates from the El Jobal mine located 650 km downriver and is transported by barge.

Equipped with two E-Cranes, one with 15 tons, the larger with 25 tons lift capacity, this installation has a proven bauxite unloading capacity of close to 6 million tons in an 8 month time window (navigation season)! The terminal has been in successful operation since early 2002 and is proof of E-Crane's excellent reliability and ease of operation in an extremely tough environment.

"WE INVESTIGATED VARIOUS OPTIONS AND EQUIPMENT MANUFACTURERS. OUR FIRST CHOICE WAS THE E-CRANE®"

-

Jim Gutsch, Vice President Seaboard Corporation

1. A wide variety of heavy-duty undercarriages (fixed, free-standing, crawler, rail and rubber tire versions available).
2. Quiet, comfortable cab with excellent visibility and ergonomic operator control station comes standard with air-conditioning.
3. A wide range of attachments available.
4. Extra large, three row roller bearing for enhanced durability.
5. A wide choice of boom and stick lengths with optimized design, featuring extra large and stiff box section structures for added strength and longer service life.

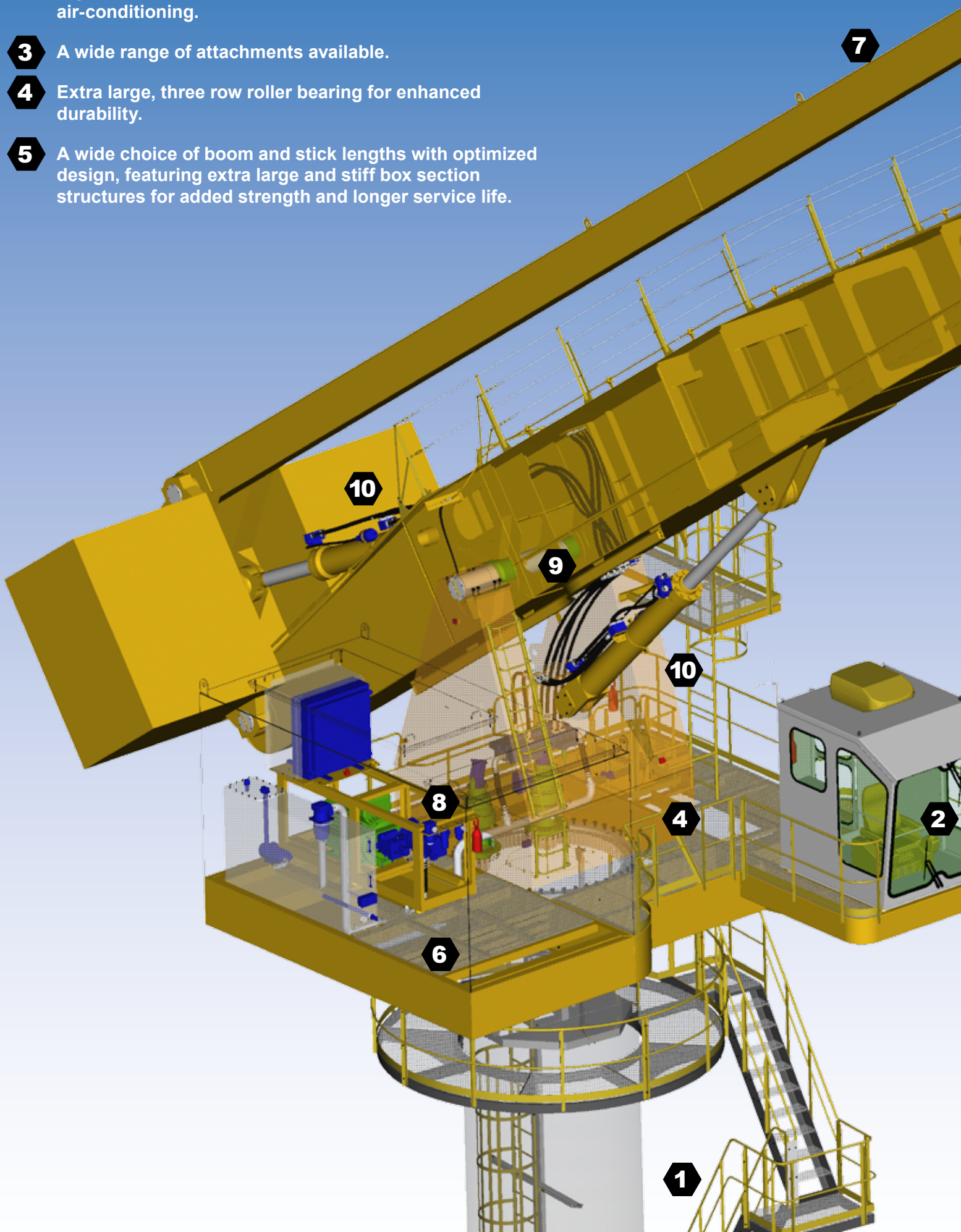

E-Crane Floating Solutions

Superior Efficiency & Productivity... Now Within Reach!

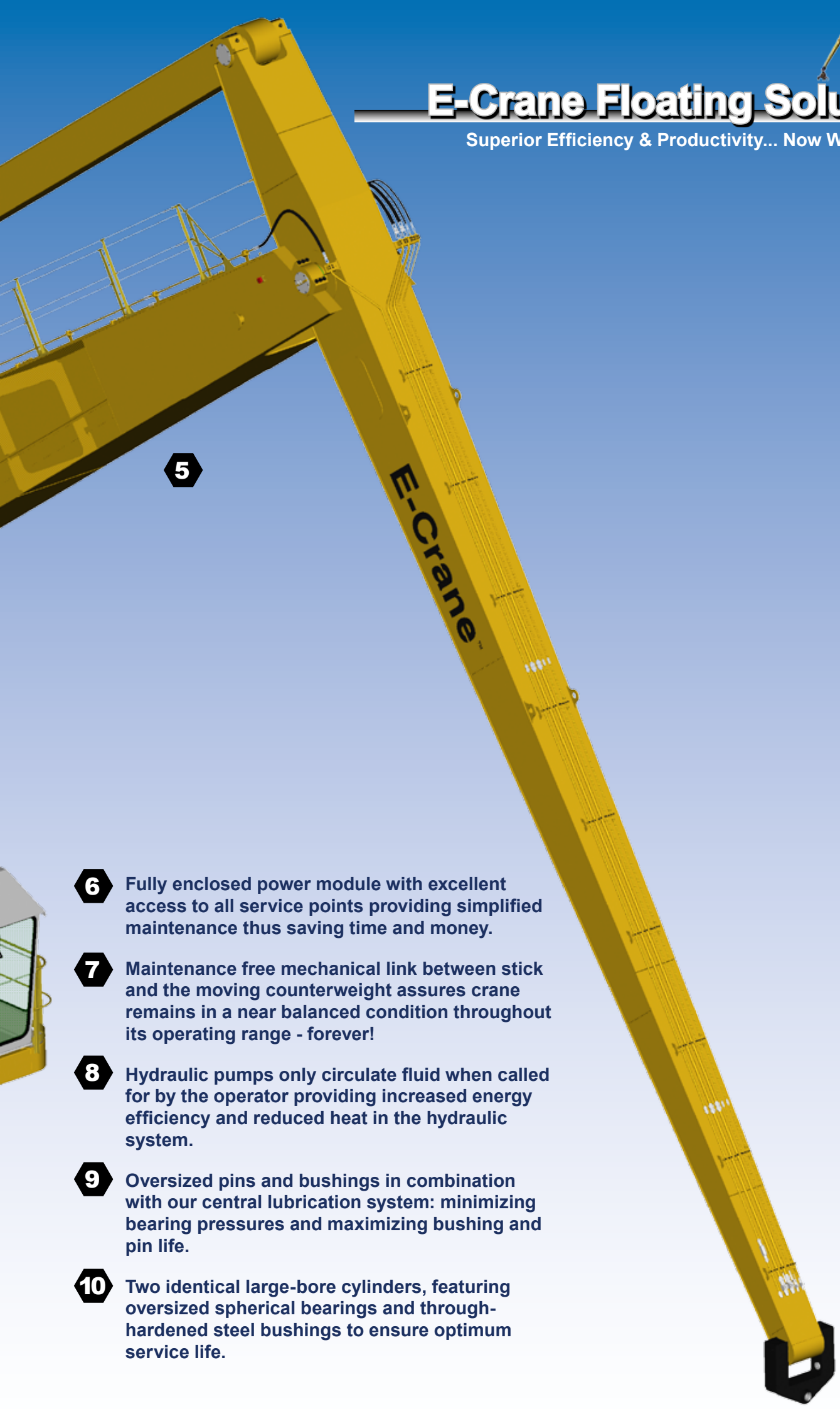

5

6 Fully enclosed power module with excellent access to all service points providing simplified maintenance thus saving time and money.

7 Maintenance free mechanical link between stick and the moving counterweight assures crane remains in a near balanced condition throughout its operating range - forever!

8 Hydraulic pumps only circulate fluid when called for by the operator providing increased energy efficiency and reduced heat in the hydraulic system.

9 Oversized pins and bushings in combination with our central lubrication system: minimizing bearing pressures and maximizing bushing and pin life.

10 Two identical large-bore cylinders, featuring oversized spherical bearings and through-hardened steel bushings to ensure optimum service life.

3

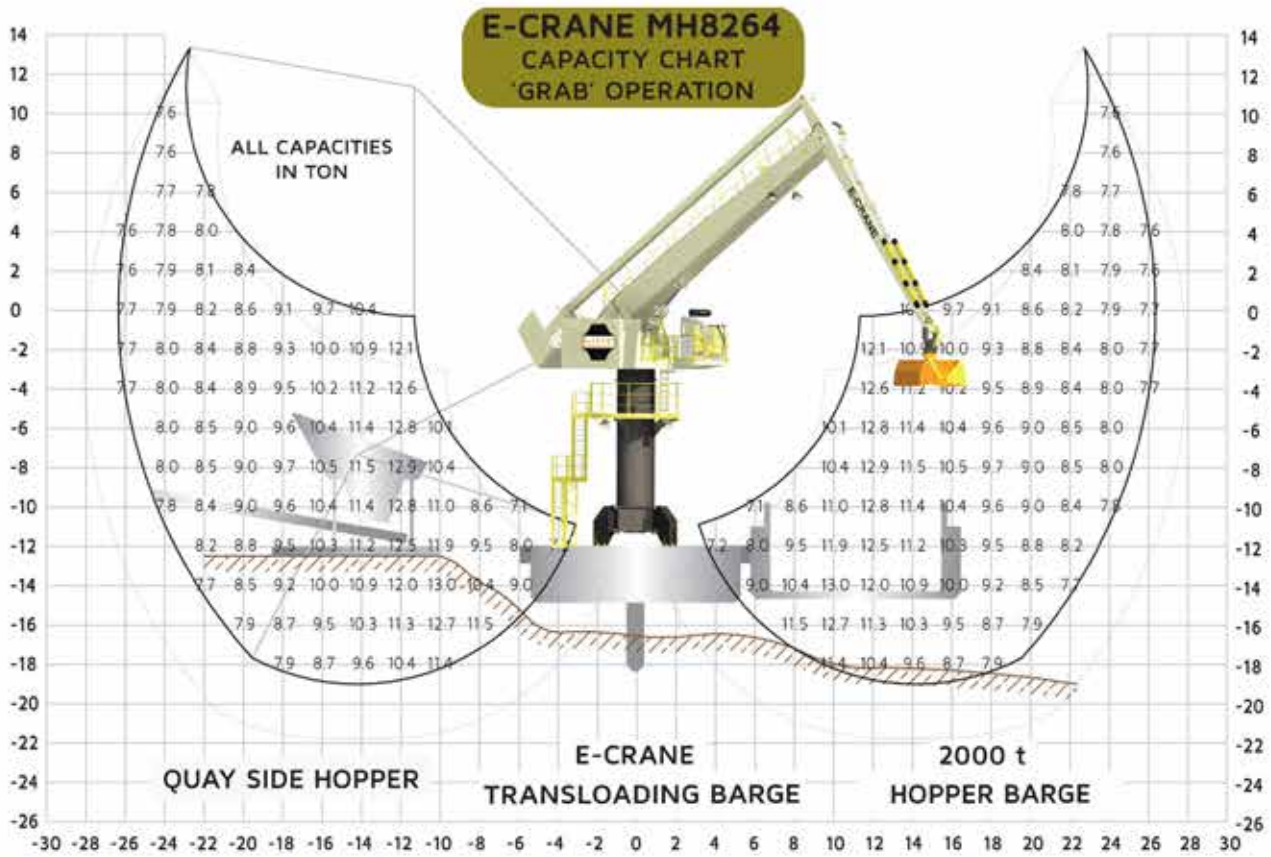

Material Handler Capacity

Grab Operation (ISO 10567).....max 13 t

Main Dimensions

Boom Length .....16,0 m + 4,5 m
Stick Length .....11,6 m + 2,5 m
Main Pivot Height (typical) .....11 m above deck

Weight

Crane Upper (incl. Counterweight) .....79 t

Working Area

Max. Outreach .....26,4 m
Min. Outreach .....3,1 m
Lifting Height .....32,3 m

Transloading Capacity (Grab Operation)

Crane Cycles .....Up to 120 cycles/hour
Best Daily Production .....Up to 6.500 t/day
Peak Performance .....500 t/hour

Design Conditions

Max Heel/Trim .....3°/2°
Ambient Working Temperature .....–25 to 45°C
Max. Windspeed .....20 m/s (operating conditions)
.....63 m/s (parked & stowed position)

Component Selection

Main Electrical Motor

Nominal Output .....132 kW/180 hp – 50 Hz/60 Hz
Main Power Supply .....400/480 VAC, 3 phase

Load Sensing Hydraulic System

Main Implement Pumps .....190 cc, 384 l/min
Swing Pump .....Closed–loop, 113 l/min
Capacity Hydraulic Tank .....1.400 liter

Hydraulic Cylinders

2 Identical Cylinders .....Bore 220 mm/Stroke 1.508 mm

Swing Bearing

Cross Roller Bearing .....Internal gear

Forces & Moments (reaction @ swing bearing)

Standard Operations (sheltered water) acc. to LRS Load Combination Case 1 (Hoisting Factor: 1.365 / Duty Factor: 1.200)

Overturning Moment .....2.630 kNm
Vertical Force .....1.290 kN
Horizontal Force .....70 kN

Open Sea Operations

Forces and moments are determined by the detailed design parameters of the barge in combination with the dynamic hoisting factor.

E-Crane Floating Solutions

Custom Engineered to Meet Customer Requirements!

Up to 500 t/hour
No Ropes!

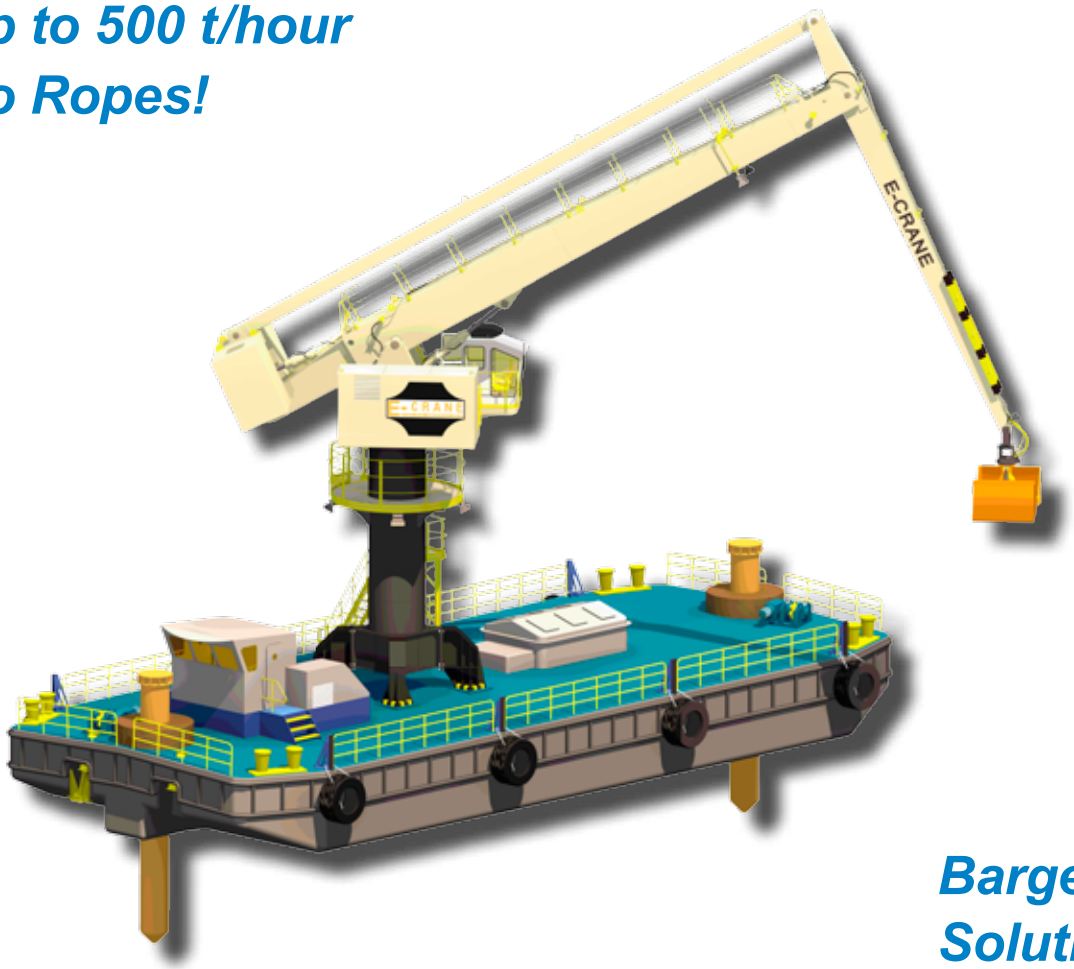

Barge-to-Shore Solution

E-Crane's Superior Crane Balance:

- Provides excellent stability
- Reduces barge dimensions
- Results in unmatched energy efficiency
- Combines superior productivity with long-term reliability

Rigid Connection with Grab for:

- High placement accuracy
- Work underneath coamings
- Optimal grab weight
- Best grab opening & closing speed

VOLGA, SUCCESSFUL IN OPERATION SINCE 2013

The MH900 series balanced material handler has been installed onto a floating terminal in the port of Kazan for the Russian company Volga Shipping. It is being used for gravel and sand unloading.

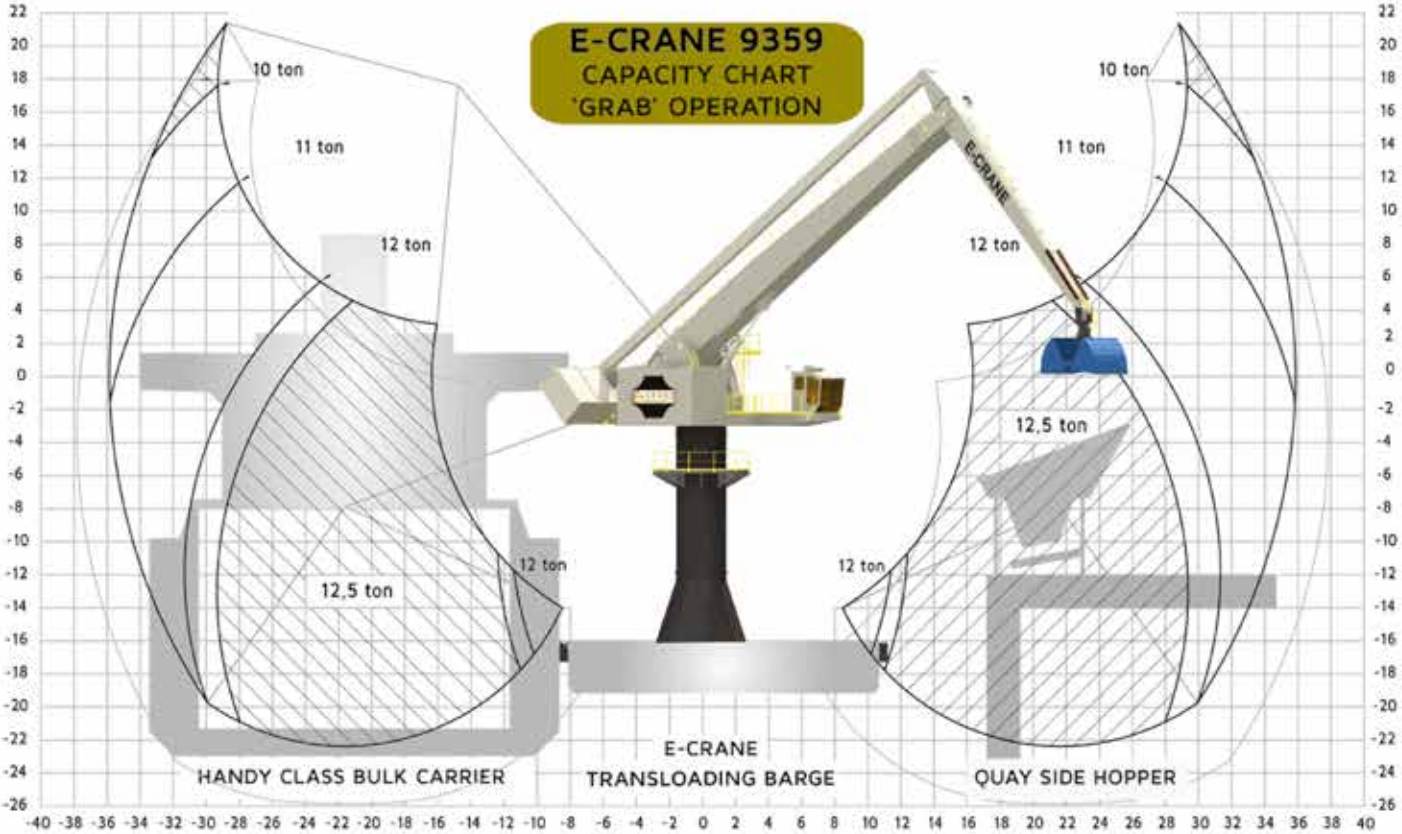

Crane Capacity

Grab Operation ..... max 12,5 t
Hook Operation ..... max 13,5 t

Main Dimensions

Boom Length ..... 23,0 m + 7,0 m
Stick Length ..... 14,5 m + 3,0 m
Main Pivot Height (typical) ..... 16 m above deck

Weight

Crane Upper (Incl. Counterweight) ..... 179 t

Working Area

Max. Outreach ..... 35,9 m
Min. Outreach ..... 8,5 m
Lifting Height ..... 43,7 m

Transloading Capacity (Grab Operation)

Crane Cycles ..... Up to 80 cycles/hour
Best Daily Production ..... Up to 13.500 t/day
Peak Performance ..... 1.000 t/hour

Crane Design Conditions

Max Heel/Trim ..... 3°/2°
Ambient Working Temperature ..... –25 to 45°C
Max. Windspeed ..... 20 m/s (operating conditions)
..... 63 m/s (parked & stowed position)

Component Selection

Main Electrical Motor

Nominal Output ..... 250 kW/335 hp – 50 Hz/60 Hz
Main Power Supply ..... 400/480 VAC, 3 phase

Load Sensing Hydraulic System

Main Implement Pumps ..... 2x 246 cc, 2x 400 l/min
Swing Pump ..... Closed–loop, 293 l/min
Capacity Hydraulic Tank ..... 1.850 liter

Hydraulic Cylinders

2 Identical Cylinders ..... Bore 280 mm/Stroke 2.450 mm

Swing Bearing

3–Row Roller Bearing ..... Internal gear

Forces & Moments (reaction @ swing bearing)

Standard Operations (sheltered water) acc. to LRS Load Combination Case 1 (Hoisting Factor: 1.365 / Duty Factor: 1.200)

Overturning Moment ..... 4.250 kNm
Vertical Force ..... 2.350 kN
Horizontal Force ..... 290 kN
Crane Swing Torque ..... 750 kNm

Open Sea Operations

Forces and moments are determined by the detailed design parameters of the barge in combination with the dynamic hoisting factor.

Up to 1000 t/hour
No Ropes!

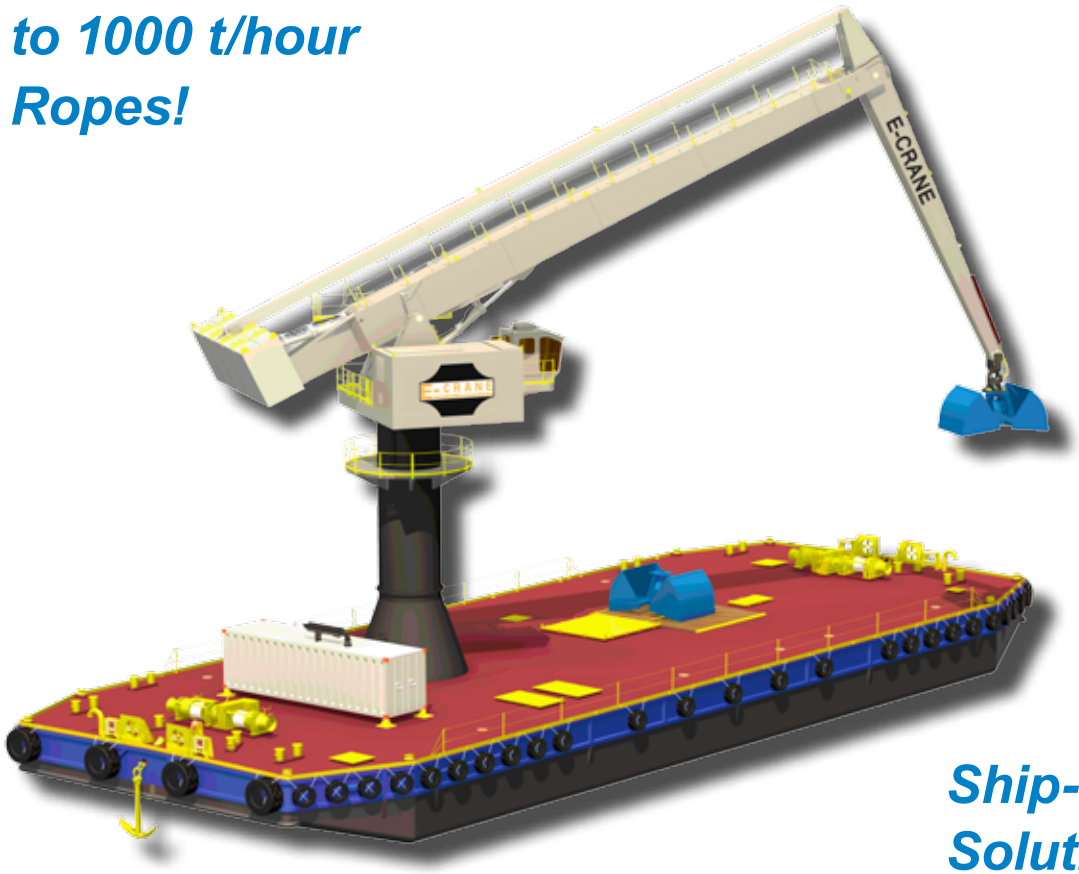

Ship-to-Shore Solution

Crane and Barge Fit Like 'Hand in Glove'!

- The E-Crane solution provides increased offloading capacity
- Great efficiency combined with excellent reliability
- Minimum investment using an existing barge

Advantages over Other Floating Crane Concepts:

- Counterweight moves up & down, as well as back & forward for smaller tipping moments resulting in best barge stability

SEABOARD/MIDEMA, SUCCESSFUL IN OPERATION SINCE 2008

Seaboard operates a 1500 Series E-Crane specially designed to unload up to Handymax sized vessels from ship-to-shore or for transloading from ship-to-ship. E-Crane carried out conceptual design studies in close cooperation with the client to determine an optimum floating terminal concept.

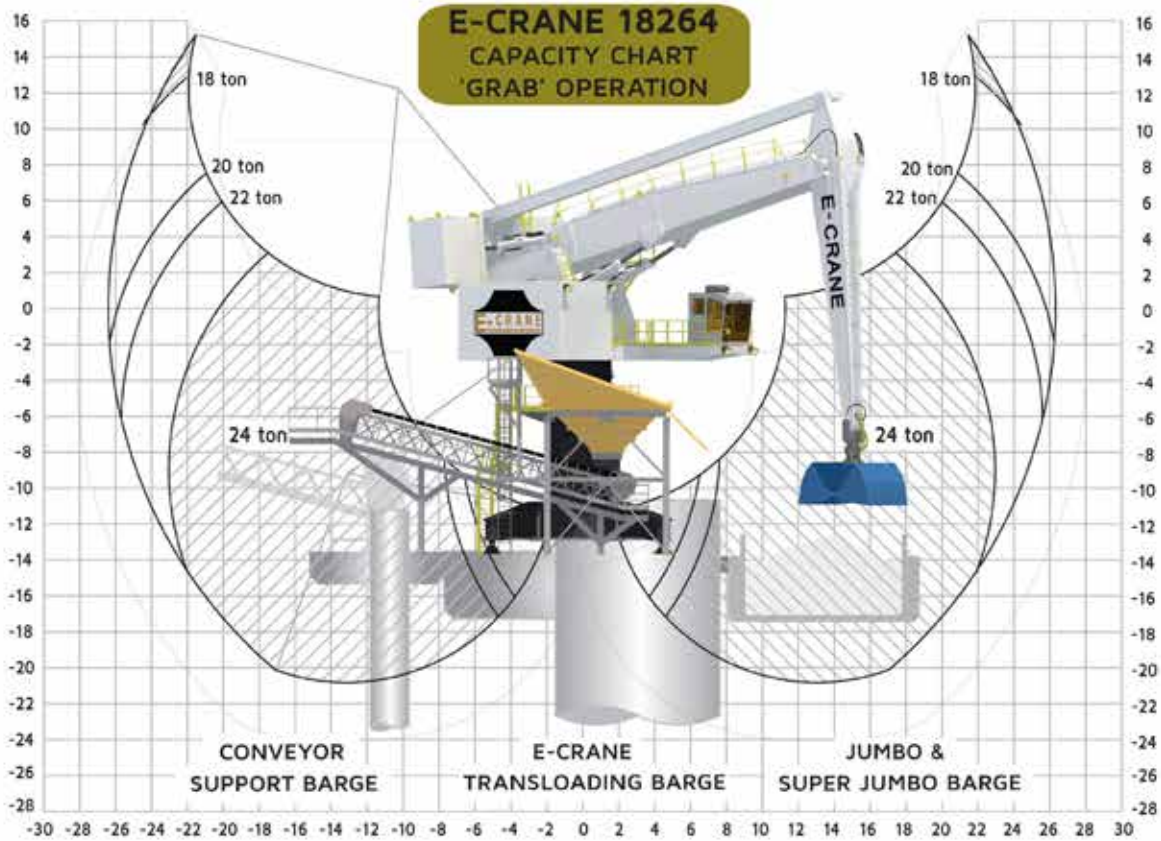

Crane Capacity

Grab Operation .....max 24 t
Hook Operation .....max 27 t

Main Dimensions

Boom Length .....16,0 m + 5,5 m
Stick Length .....11,6 m + 3,0 m
Main Pivot Height (typical) .....13,3 m above deck

Weight

Crane Upper (incl. Counterweight) .....186 t

Working Area

Max. Outreach .....26,4 m
Min. Outreach .....1,7 m
Lifting Height .....36,0 m

Transloading Capacity (Grab Operation)

Crane Cycles .....Up to 90 cycles/hour
Best Daily Production .....Up to 30.000 t/day
Peak Performance .....1.500 t/hour

Crane Design Conditions

Max Heel/Trim .....3°/2°
Ambient Working Temperature .....–25 to 45°C
Max. Windspeed .....20 m/s (operating conditions)
.....63 m/s (parked & stowed position)

Component Selection

Main Electrical Motor

Nominal Output .....450 kW/600 hp – 50 Hz/60 Hz
Main Power Supply .....400/480 VAC, 3 phase

Load Sensing Hydraulic System

Main Implement Pumps .....4x 250 cc, 2x 870 l/min
Swing Pump .....Closed–loop, 345 l/min
Capacity Hydraulic Tank .....4.000 liter

Hydraulic Cylinders

4 Identical Cylinders .....Bore 280 mm/Stroke 2.450 mm

Swing Bearing

3–Row Roller Bearing .....Internal gear

Forces & Moments (reaction @ swing bearing)

Standard Operations (sheltered water) acc. to LRS Load Combination Case 1 (Hoisting Factor: 1.365 / Duty Factor: 1.200)

Overturning Moment .....6.600 kNm
Vertical Force .....2.625 kN
Horizontal Force .....325 kN
Crane Swing Torque .....960 kNm

Open Sea Operations

Forces and moments are determined by the detailed design parameters of the barge in combination with the dynamic hoisting factor.

E-Crane Floating Solutions

Custom Engineered for Superior Productivity!

Up to 1500 t/hour
No Ropes!

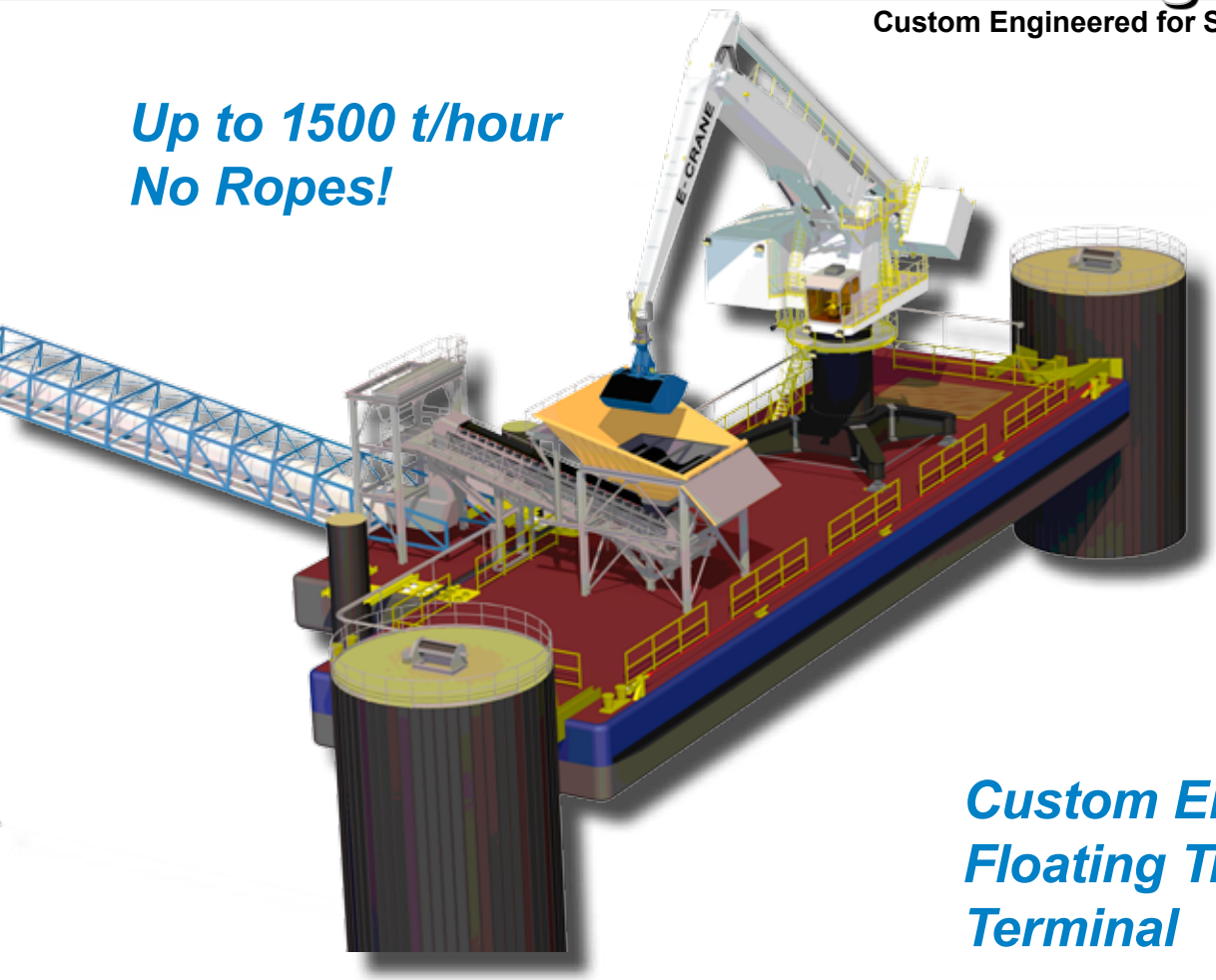

Custom Engineered Floating Transloading Terminal

E-Crane Barge Shifting and Breasting Solutions:

- The ultimate system in barge moving controllability.
- Utilizes infinitely variable speed control in both the breasting and moving modes
- Ensures that the lines remain under controlled tension throughout the moving process
- Results in smooth acceleration and de-celeration
- Perfectly integrated into crane operators cab for best comfort & safety

LOWMAN, SUCCESSFUL IN OPERATION SINCE 2007

When PowerSouth Energy Cooperative upgraded its Lowman Power Plant for gas desulfurization, E-Crane offered a turnkey solution to the material unloading and river level problems: a floating terminal consisting of two barges, a hopper, a barge-haul system and a barge-breasting system.

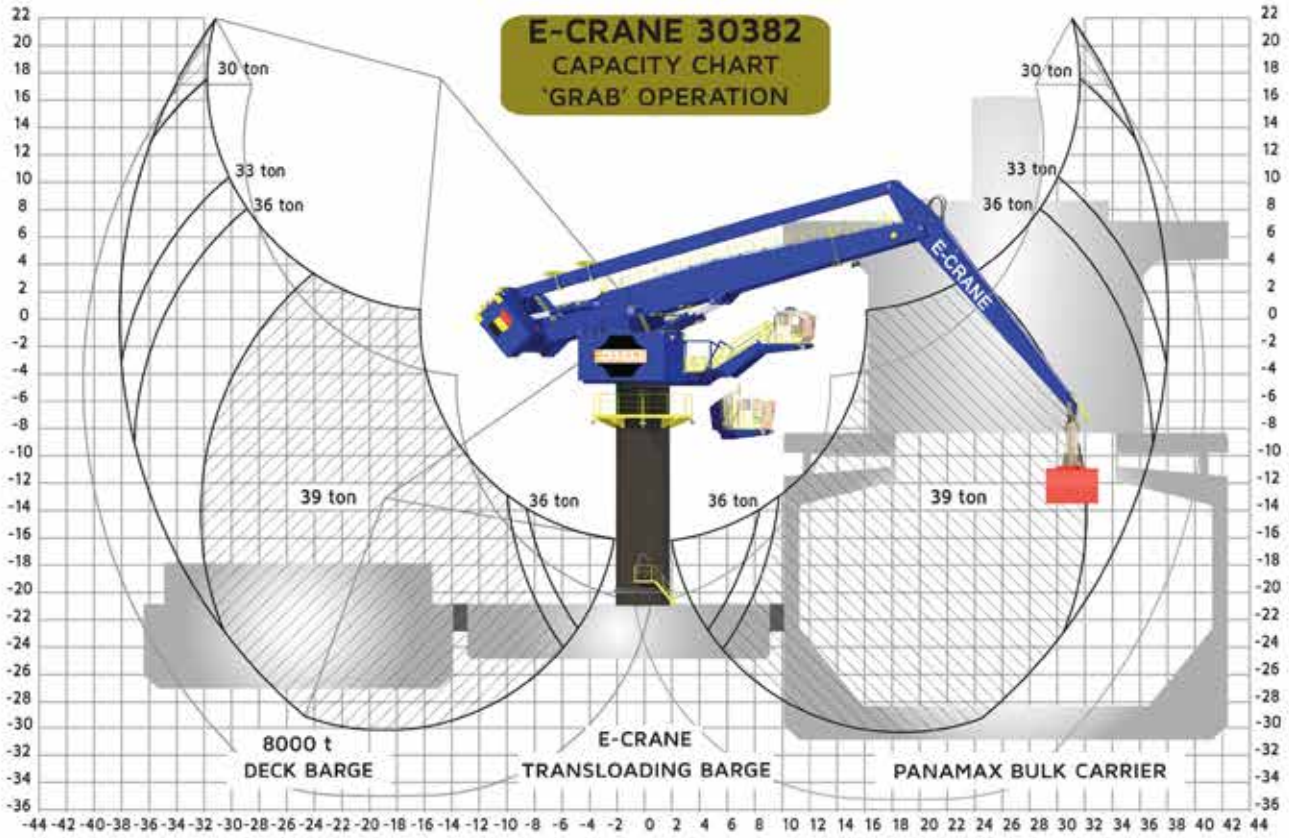

Crane Capacity

Grab Operation .....max 39 t
Hook Operation .....max 45 t

Main Dimensions

Boom Length .....23,0 m + 8,5 m
Stick Length .....17,0 m + 4,0 m
Main Pivot Height (typical) .....21 m above deck

Weight

Crane Upper (Incl. Counterweight) .....393 t

Working Area

Max. Outreach .....38,2 m
Min. Outreach .....2,0 m
Lifting Height .....52,2 m

Transloading Capacity (Grab Operation)

Crane Cycles .....Up to 60 cycles/hour
Best Daily Production .....Up to 30.000 t/day
Peak Performance .....2.000 t/hour

Crane Design Conditions

Max Heel/Trim .....3°/2°
Ambient Working Temperature .....–25 to 45°C
Max. Windspeed .....20 m/s (operating conditions)
.....63 m/s (parked & stowed position)

Component Selection

Main Electrical Motor

Nominal Output .....630 kW/844 hp – 50 Hz/60 Hz
Main Power Supply .....400/480 VAC, 3 phase

Load Sensing Hydraulic System

Main Implement Pumps .....4x 260 cc, 4x 450 l/min
Swing Pump .....Closed–loop, 430 l/min
Capacity Hydraulic Tank .....4.000 liter

Hydraulic Cylinders

5 Identical Cylinders .....Bore 330 mm/Stroke 2.950 mm

Swing Bearing

3–Row Roller Bearing .....Internal gear

Forces & Moments (reaction @ swing bearing)

Standard Operations (sheltered water) acc. to LRS Load Combination Case 1 (Hoisting Factor: 1.365 / Duty Factor: 1.200)

Overturning Moment .....14.500 kNm
Vertical Force .....5.250 kN
Horizontal Force .....640 kN
Crane Swing Torque .....2.400 kNm

Open Sea Operations

Forces and moments are determined by the detailed design parameters of the barge in combination with the dynamic hoisting factor.

Up to 2000 t/hour
No Ropes!

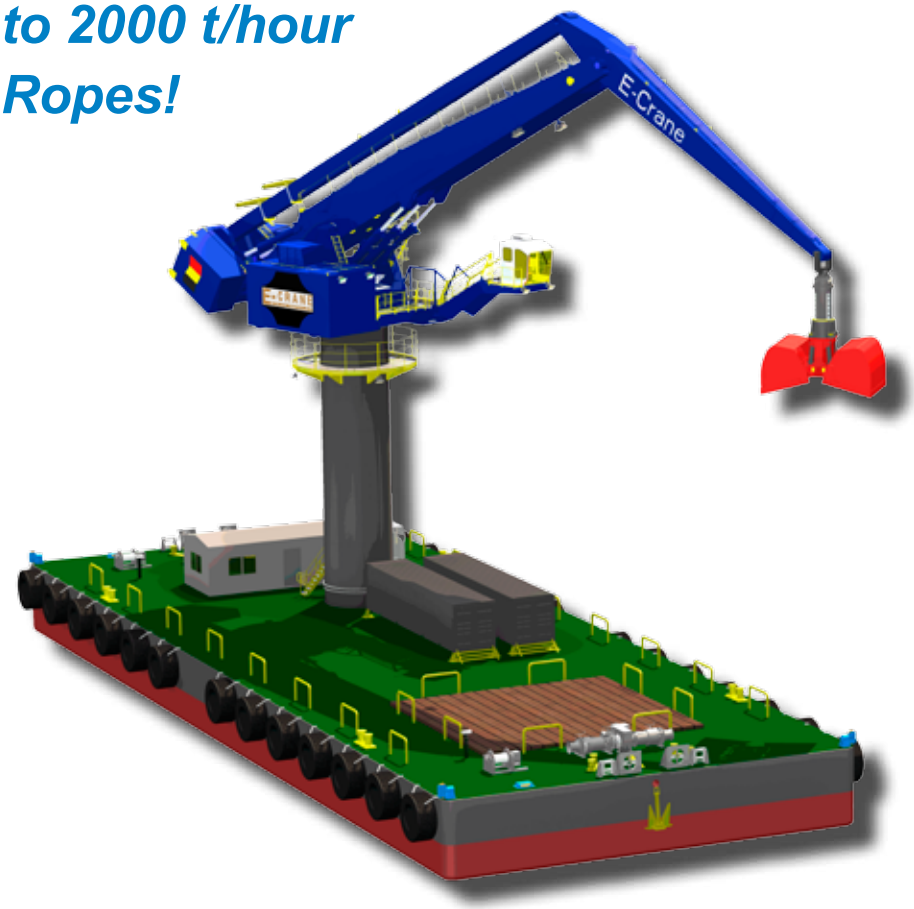

Barge-to-Ship Mid-Stream Operation

E-Crane®, Best Choice for Professional Bulk Handling:

- Used for loading & unloading Panamax & Capesize vessels
- Excellent performance for tough, heavy or sticky bulk cargos
- Push down capability into bulk materials for best possible grab filling
- Minimum investment using an existing barge

MAGGI, SUCCESSFUL IN OPERATION SINCE 2014

Maggi is a barge mounted 3000 Series E-Crane used to unload material barges. The material will be directly transferred to a Panamax sized ship on the other side of the crane barge. The midstream transfer will occur along the Amazon river and will be the largest midstream transfer operation ever accomplished for E-Crane.

E-CRANE®
QUILIBRIUM

3000 Series: 27450 PD-E

3000 Series: 26317 PD-E

MH1200: MH10317 PD-E

1500 Series: 11264 PD-E

E-Crane International USA
1332 Freese Works Place
Galion, OH 44833
USA

Phone: +1 (419) 468 0090
Fax: +1 (419) 468 0074
Website: www.e-crane.com

E-Crane Floating Solutions

Customer Satisfaction Guaranteed!

1500 Series: 11264 PD-E
2000 Series: 18264 PD-E

700 Series: 4248 PD-E

MH1200: MH10290 PD-E

700 Series: 4264 PD-E

E-Crane International EUR
Argon 15G
4751 XC Oud Gastel
The Netherlands

Phone: +31 (0) 165 320 100
Fax: +31 (0) 165 320 759
Website: www.e-crane.com

Product Range

Custom engineered to meet customer requirements

700 SERIES

Model	Maximum Outreach		Capacity Duty Cycle		Capacity Lift Mode	
4248	24,8 m	81.5 ft	5,5 ton	6.0 USt	6,5 ton	7.0 USt
4264	26,4 m	86.5 ft	5,5 ton	6.0 USt	6,5 ton	7.0 USt
4290	29,0 m	95.0 ft	5,5 ton	6.0 USt	6,0 ton	6.6 USt
4317	31,7 m	104.0 ft	5,3 ton	5.8 USt	6,0 ton	6.6 USt
6317	31,7 m	104.0 ft	7,5 ton	8.3 USt	9,0 ton	9.9 USt

1000 B-SERIES

Model	Maximum Outreach		Capacity Duty Cycle		Capacity Lift Mode	
7248	24,8 m	81.5 ft	9,1 ton	10.0 USt	12,0 ton	13.2 USt
7264	26,4 m	86.5 ft	9,1 ton	10.0 USt	12,0 ton	13.2 USt
7290	29,0 m	95.0 ft	10,0 ton	11.0 USt	13,6 ton	15.0 USt
7317	31,7 m	104.0 ft	10,0 ton	11.0 USt	13,6 ton	15.0 USt
7359	35,9 m	117.5 ft	10,0 ton	11.0 USt	13,0 ton	14.3 USt
7382	38,2 m	125.5 ft	10,0 ton	11.0 USt	13,6 ton	15.0 USt
7421	42,1 m	138.0 ft	10,0 ton	11.0 USt	11,0 ton	12.1 USt
7450	45,0 m	147.6 ft	10,0 ton	11.0 USt	11,0 ton	12.1 USt

1500 B-SERIES

Model	Maximum Outreach		Capacity Duty Cycle		Capacity Lift Mode	
11248	24,8 m	81.5 ft	17,0 ton	18.7 USt	19,0 ton	20.9 USt
11264	26,4 m	86.5 ft	16,5 ton	18.2 USt	19,0 ton	20.9 USt
10290	29,0 m	95.0 ft	14,0 ton	15.4 USt	15,5 ton	17.1 USt
9317	31,7 m	104.0 ft	14,0 ton	15.4 USt	15,5 ton	17.1 USt
9359	35,9 m	117.5 ft	12,5 ton	13.8 USt	13,5 ton	14.9 USt
9382	38,2 m	125.5 ft	12,0 ton	13.2 USt	13,9 ton	14.9 USt

2000 B-SERIES

Model	Maximum Outreach		Capacity Duty Cycle		Capacity Lift Mode	
18264	26,4 m	86.5 ft	24,0 ton	26.5 USt	27,0 ton	30.0 USt
16290	29,0 m	95.0 ft	20,0 ton	22.0 USt	25,0 ton	27.5 USt
15317	31,7 m	104.0 ft	20,0 ton	22.0 USt	25,0 ton	27.5 USt
14359	35,9 m	117.5 ft	17,0 ton	18.7 USt	21,0 ton	23.1 USt
17359	35,9 m	117.5 ft	21,0 ton	23.1 USt	28,0 ton	30.8 USt
13382	38,2 m	125.5 ft	16,0 ton	17.6 USt	20,0 ton	22.0 USt
16382	38,2 m	125.5 ft	20,0 ton	22.0 USt	24,0 ton	26.4 USt
21382	38,2 m	125.5 ft	30,0 ton	33.0 USt	40,0 ton	44.0 USt
19421	42,1 m	138.0 ft	25,0 ton	27.5 USt	33,0 ton	36.3 USt
18450	45,0 m	147.6 ft	24,5 ton	27.0 USt	29,0 ton	32.0 USt

3000 B-SERIES

Model	Maximum Outreach		Capacity Duty Cycle		Capacity Lift Mode	
26317	31,7 m	104.0 ft	34,0 ton	37.4 USt	40,0 ton	44.0 USt
23359	35,9 m	117.5 ft	30,0 ton	33.0 USt	40,0 ton	44.0 USt
30382	38,2 m	125.5 ft	39,0 ton	42.9 USt	45,0 ton	49.5 USt
27450	45,0 m	147.6 ft	36,0 ton	39.6 USt	43,0 ton	47.3 USt
26478	47,8 m	156.8 ft	33,0 ton	36.3 USt	40,0 ton	44.0 USt

www.e-crane.com
E-Crane Worldwide - Koekoeklaan 53 - 9991 Adegem - Belgium - Phone : +32-(0)9-3780444 - Fax : +32-(0)9-3780645